Split Rib (2)

10 cm

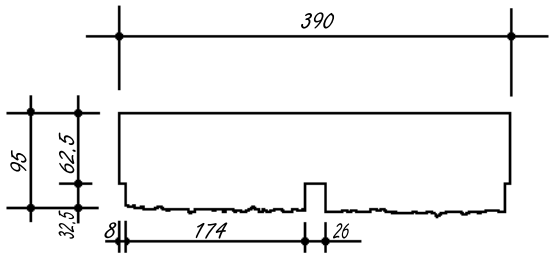

15 cm

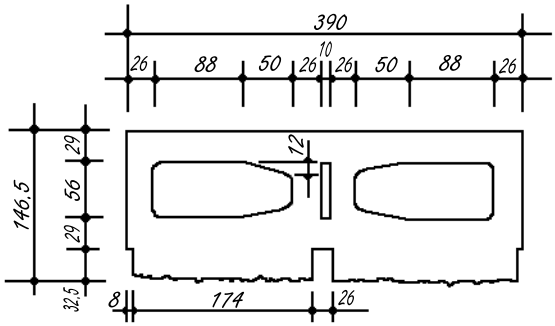

20 cm

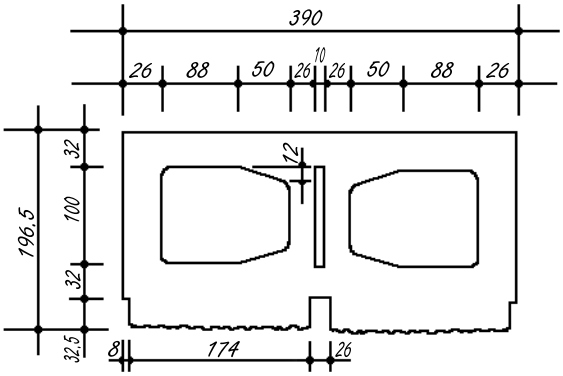

25 cm

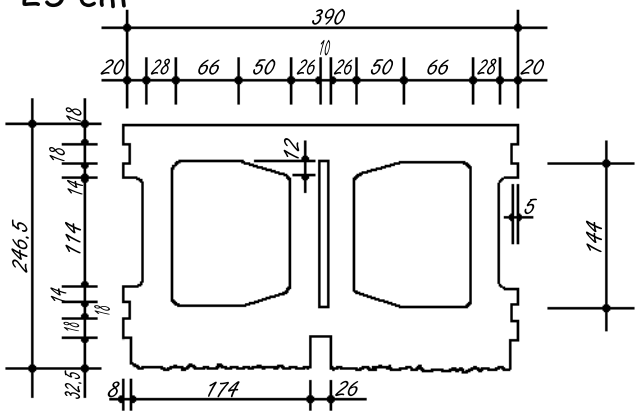

30 cm

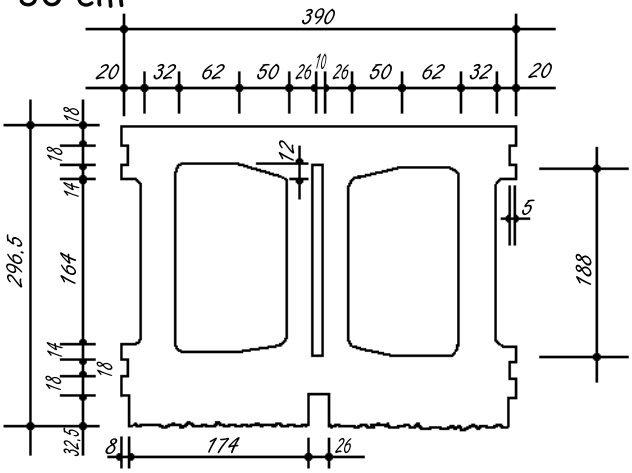

Corner

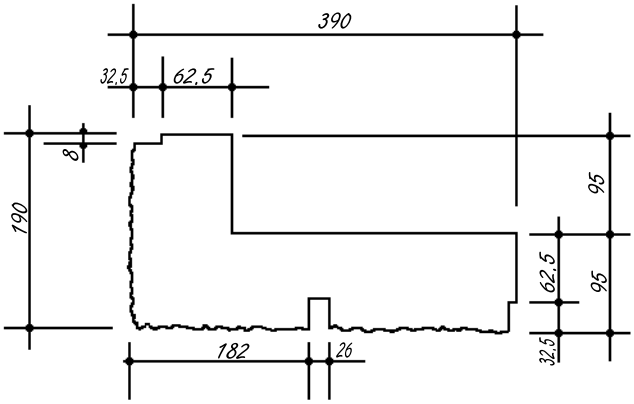

Note: Unit size code 20, 25, 30 cm available in plain & open ends.